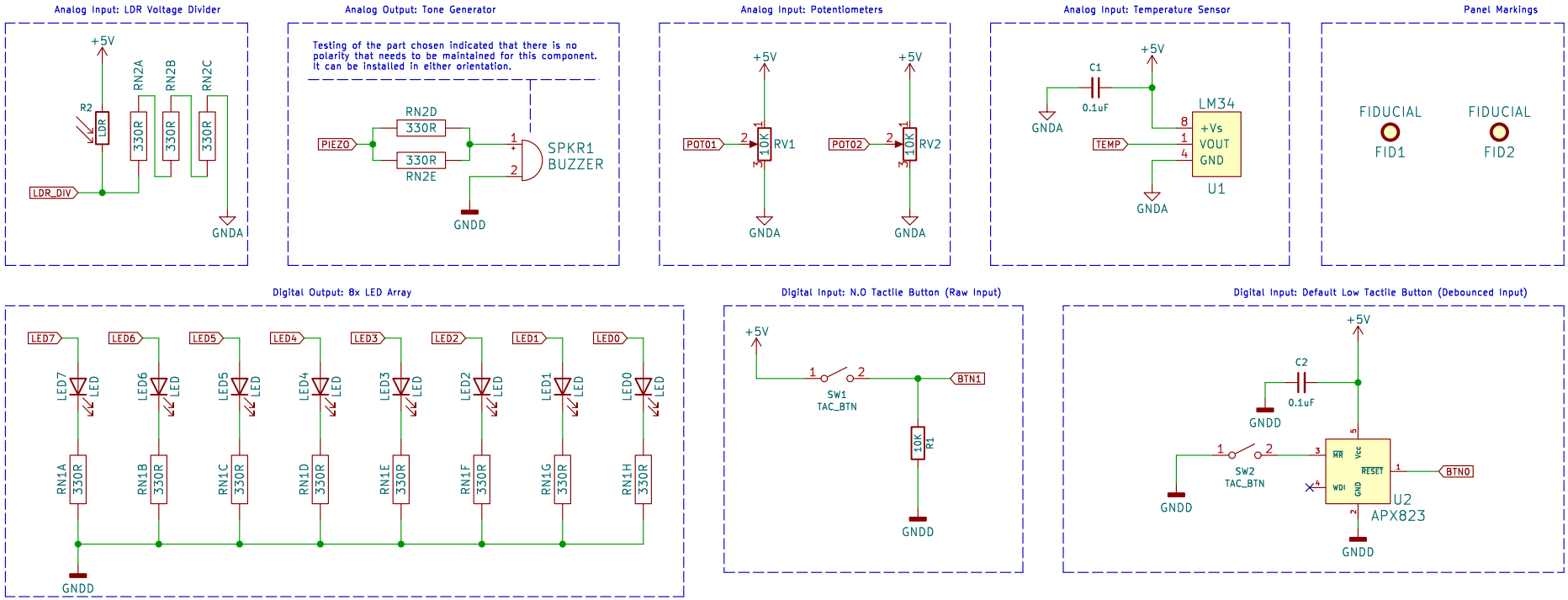

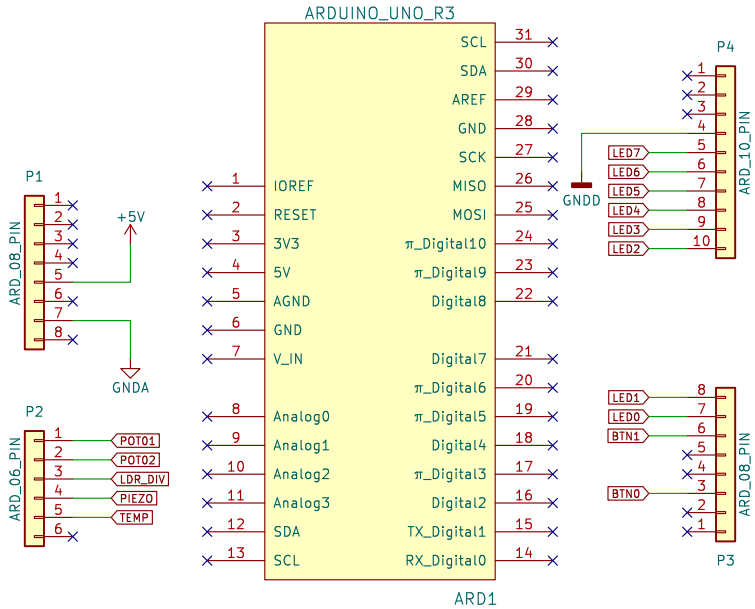

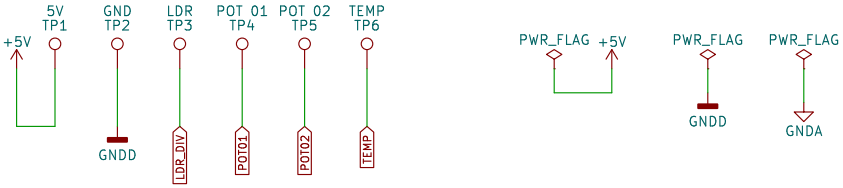

Rev1...
Switched debounce from RC net to simple inverter
Replaced discrete resistors with resistor network
Replaced 20K pot with 10K and changed 10K pots to thumbwheel style

Rev2...
Debounce changed to MR Reset IC
Pot footprints changed to SIL footprint

Rev3...
Schematic Imported into v5.1.6, Symbols Remapped
Push Buttons Updated To two logical / 4 physical standard

Rev4...
Replaced PTH Piezo for SMD to save on assembly costs

Rev5...
Replaced the push button part numbers with corrected values. The original part specified was too small for the footprint.

In collaboration with Michael James of the Programming Electronics Academy

Rheingold Heavy / Programming Electronics Academy

Sheet: /

File: OSHG_Basics_Shield.sch

Title: OSHG Basics Shield

Size: USLetter	Date: 2020-10-02	**Rev: 4**
KiCad E.D.A. 9.0.0		Id: 1/1